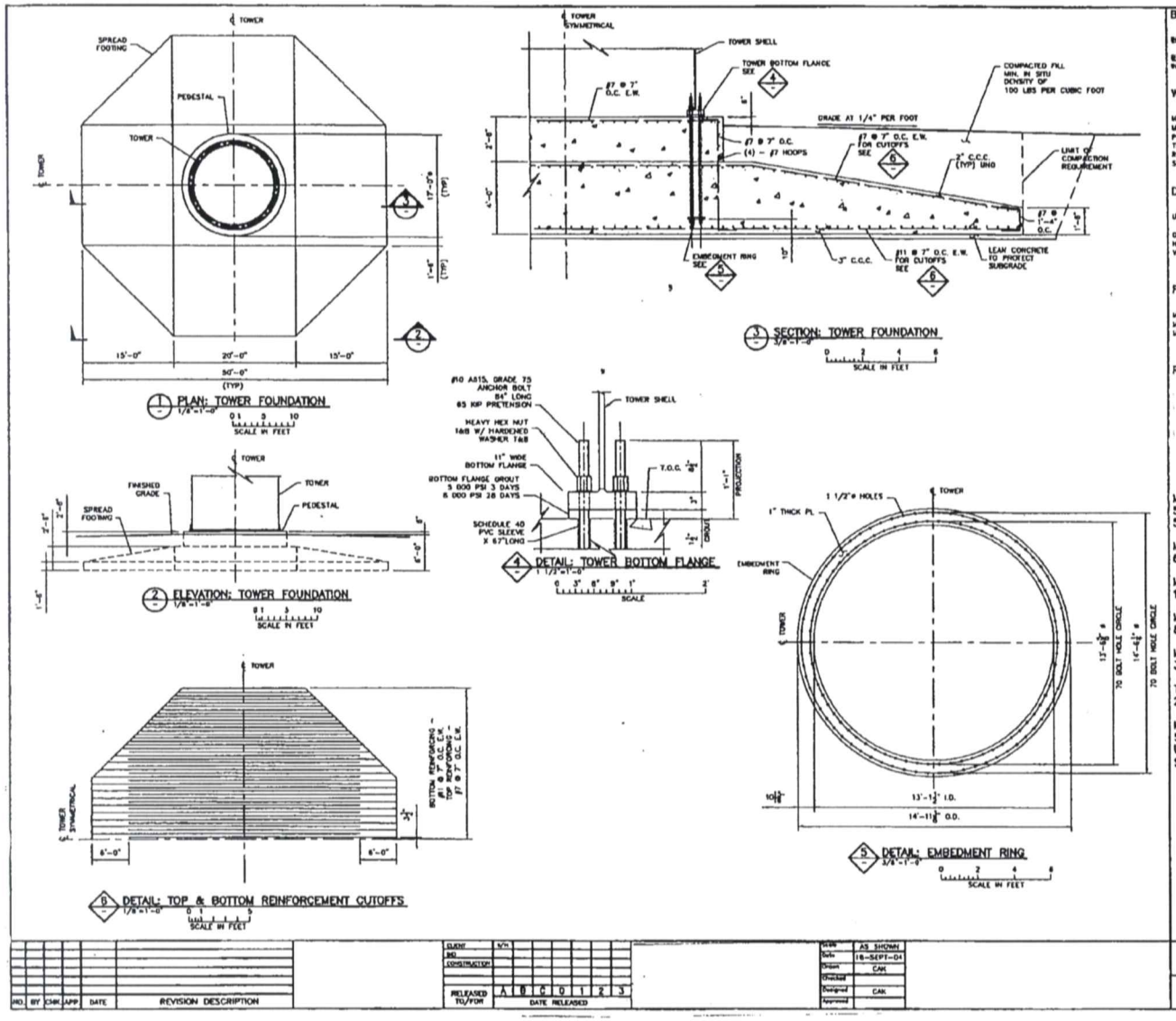

BUILDING AND DESIGN CODES:

INTERNATIONAL BUILDING CODE 2000, INTERNATIONAL CONFERENCE OF BUILDING OFFICIALS.

BUILDING CODE REQUIREMENTS FOR STRUCTURAL CONCRETE, ACI 318, 2000, AMERICAN CONCRETE INSTITUTE.

WIND TURBINE AND TOWER:

MANUFACTURER:
MODEL:
POWER OUTPUT:
TURBINE HUB HEIGHT:
ROTOR DIAMETER:
SITE LOCATION:

DESIGN SERVICE LOADS:

UNFACTORED SERVICE LOADS DUE TO EXTREME WIND CONDITION CLASS EC-III (CRITICAL)

OVERTURNING MOMENT, M_{xy} = 34,921 kN-m = 25,757 ft-kips
HORIZONTAL BASE SHEAR, H_{xy} = 525 kN = 118 kips
VERTICAL TOWER LOAD, N_z = 1,957 kN = 440 kips

FOUNDATION DESIGN DATA:

MIN. FACTOR OF SAFETY AGAINST OVERTURNING: MIN. 1.5
MIN. FACTOR OF SAFETY AGAINST SLIDING: MIN. 1.5
MIN. FACTOR OF SAFETY AGAINST BEARING CAPACITY FAILURE: MIN 2.3

REFERENCE DOCUMENTS:

MIN. 28-DAY COMPRESSIVE STRENGTH OF CONCRETE:
5000 PSI PEDESTAL
5000 PSI FOOTING

MIN. YIELD POINT STRENGTH OF REINFORCING BAR:
60 KSI

MIN. TENSILE POINT STRENGTH OF ANCHOR BOLTS:
100 KSI MIN. YIELD STRENGTH OF 75 KSI

MIN. COMPRESSIVE STRENGTH OF NON-SHRINK GROUT:
8,000 PSI. @ 28 DAYS, 5,000 PSI @ 3 DAYS

MIN. YIELD POINT STRENGTH OF EMBEDMENT PLATE:
36 KSI

TOTAL NEAT VOLUME OF CONCRETE:
247 CUBIC YARDS

MINIMUM ASSUMED AVERAGE SOIL PROPERTIES OVER DEPTH OF 50 FEET:
UNDRAINED SHEAR STRENGTH – 1500 PSF
SHEAR WAVE VELOCITY – 650 FT/S

ABBREVIATIONS:

B.O.	BOTTOM OF	O.C.	ON CENTER
C.C.C.	CLEAR CONCRETE COVER	O.D.	OUTSIDE DIAMETER
℄	CENTER LINE	R	RADIUS
EL.	ELEVATION	T&B	TOP AND BOTTOM
E.W.	EACH WAY	T.O.C.	TOP OF CONCRETE
EX.	EXISTING	TYP	TYPICAL
I.D.	INSIDE DIAMETER	W/	WITH
MIN.	MINIMUM	ø	DIAMETER

READ DRAWING IN CONJUNCTION WITH DRAWING S-02 FOR CONSTRUCTION SPECIFICATIONS, SUBMITTAL, AND TESTING REQUIREMENTS

NO.	BY	CHK	APP	DATE	REVISION DESCRIPTION

RELEASED TO/FOR: A B C D 1 2 3 — DATE RELEASED

SCALE: AS SHOWN
Date: 16-SEPT-04
Drawn: CAK
Checked:
Designed: CAK
Approved:

SPREAD FOOTING FOUNDATION
PLAN, ELEVATION, SECTION & DETAILS

CLIENT PROJECT No.
DWG. No. S-05
REV. No. A

TYPICAL SPREAD FOOTING PLAN AND PROFILE
- FOR INFORMATION ONLY -